# 19V Vin Quad Channel Power Management IC for Automotive Applications

## FEATURES

- Qualified for Automotive Applications
- AEC-Q100 Qualified with the Following Results:
  - Device Temperature Grade 1: -40°C to 125°C Ambient Operating Temperature Range
- Wide Input Voltage Range: 4V-19V
- Synchronous HV Pre-Buck1:
  - Up to 1.2A Continuous Output Current
  - Auto-adaptive Output Voltage Depends on LDO Output Voltage
- Synchronous LV Post-Buck2:
  - Powered by Pre-Buck1
  - Up to 0.6A Continuous Output Current
  - Fixed Output Voltage of 1.8V
- Synchronous LV Post-Buck3:
  - Powered by Pre-Buck1
  - Up to 1.2A Continuous Output Current
  - Adjustable Output Voltage: 1.1V/1.2V/1.3V/1.5V
- LV Post-LDO:
  - Powered by Pre-Buck1
  - Up to 0.3A Continuous Output Current
  - Adjustable Output Voltage: 2.7V/2.8V/2.9V/3.3V
  - Low Noise and High PSRR
- Low Shutdown Current: 1uA
- Fixed 2.2MHz Switching Frequency
- Integrated Frequency Dither for EMI Mitigation
- FCCM Operation
- 60ns Minimum On-time
- 6 Flexible Sequence via External Resistor
- 9 Flexible Output Voltage via External Resistor
- Push-pull Power Good Indicator
- Integrated Hiccup Mode Protection Features:
  - Input Over-voltage Protection
  - Output Over-voltage Protection
  - Output Under-voltage Protection
  - Over-current Protection
  - Adjustable Under-voltage Lockout
  - Thermal Shutdown Protection
- Available in QFN-18L(2.5mm*3.5mm)

LDOOUT is the output of LDO, which is powered from VOUT1 (need to connect LDOIN to VOUT1) and can output 300mA continuous current with the output voltage set to 2.7V/2.8V/2.9V/3.3V through RSET PIN for different sensors.

With a compact QFN2.5x3.5 package, the SCT61240Q greatly reduces external components count and PCB space.

## TYPICAL APPLICATION

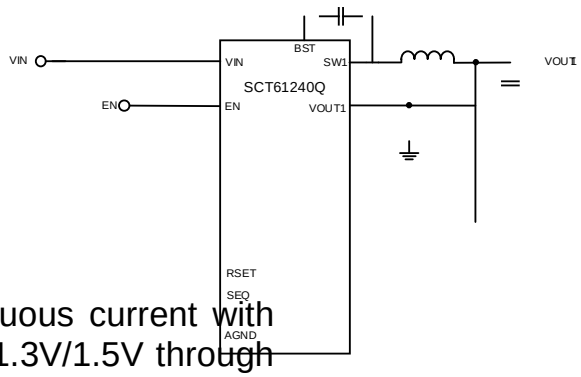


-Q
VOUT1 and can output 1.2A continuous current with the output voltage set to 1.1V/1.2V/1.3V/1.5V through RSET PIN for different sensors.

 © 2024 Silicon Content Technology Co., Ltd. All Rights Reserved 

## REVISION HISTORY

NOTE: Page numbers for previous revisions may differ from page numbers in the current version

Revision 1.0: Released to Market

Revision 1.1: Update DEVICE ORDER INFORMATION

Revision 1.2: Corrected few typographical errors.

ore information www.silicontent.c Con Content Ltd. All Rights Res
older Links: SCT6

## THERMAL INFORMATION(continued)

| PARAMETER | THERMAL METRIC | QFN-18L | UNIT |
|---|---|---|---|
| R B | Junction to board thermal resistance(1) | 8.8 | °C/W |

(1) SCT provides R and R numbers only as reference to estimate junction temperatures of the devices. R and R are not a characteristic of package itself, but of many other system level characteristics such as the design and layout of the printed circuit board (PCB) on H8a2(el)17.7 ( )7.48 re2eh

 © 2024 Silicon Content Technology Co., Ltd. All Rights Reserved

## ELECTRICAL CHARACTERISTICS (continued)

$V_{IN}$=10V, $T_A$=-40°C~150°C, typical values are tested under 25°C

| SYMBOL | PARAMETER |
|---|---|

 © 2024 Silicon Content Technology Co., Ltd. All Rights Reserved

## ELECTRICAL CHARACTERISTICS (Continued)

$V_{IN}$=10V, $T_A$=-40°C~150°C, typical values are tested under 25°C.

| SYMBOL | PARAMETER | TEST CONDITION | MIN | TYP | MAX | UNIT |
|---|---|---|---|---|---|---|
| $V_{DROP\_LDO}$ | LDO Dropout Voltage | LDOIN=2.9V, setting LDO output =2.8V, ILDO = 300mA | | 110 | 200 | mV |
| $L_{DO\_LINE\_REG}$ | LDO Line Regulation | LDOOUT set to 2.7V, LDOIN=3V to 5V, ILDO = 100mA | | 0.02 | | %/V |
| $L_{DO\_LOAD\_REG}$ | LDO Load Regulation | LDOIN=3.3V, LDOOUT=2.7V, ILDO from 10mA to 300mA. | | 0.03 | | % |
| $I_{LIM\_LDO}$ | LDO Current Limit | LDOIN=3 V, setting LDOOUT to 2.8V, force LDOOUT=2.5V | 350 | 400 | 460 | mA |
| $PSRR_{\_LDO}$(1) | LDO PSRR | LDOIN= 3.1V, LDOOUT=2.8V, C(NR)=100nF, COUT=20 F, ILDO = 100mA @ 1kHz | | 70 | | dB |
| | | LDOIN= 3.1V, LDOOUT=2.8V, C(NR)=100nF, COUT=20 F, ILDO = 100mA @ 10kHz | | 56 | | dB |
| | | LDOIN= 3.1V, LDOOUT=2.8V, C(NR)=100nF, COUT=20 F, ILDO = 100mA @ 100kHz | | 35 | | dB |
| | | LDOIN= 3.1V, LDOOUT=2.8V, C(NR)=100nF, COUT=20 F, ILDO = 100mA @ 1MHz | | 29 | | dB |
| | | LDOIN= 3.1V, LDOOUT=2.8V, C(NR)=100nF, COUT=20 F, ILDO = 100mA @ 2.2MHz | | 24 | | dB |
| $eN_{\_LDO}$(1) | LDO noise | LDOIN= 3.1V, LDOOUT=2.8V, C(NR)=100nF, COUT=20 F, ILDO = 100mA, From 10Hz to 100kHz | | 30 | | $V_{rms}$ |
| $I_{ILEAK\_LDOOUT}$ | LDOOUT(VOUT4) PIN Leakage | | | 0.01 | 1 | A |
| $R_{DIS\_LDO}$ | LDOOUT(VOUT4) Output Discharge resistance | | 30 | 50 | 70 | Ohm |
| Power Good OV/UV threshold | | | | | | |
| PGOV | Vout1/2/3/4 Power Good Over Voltage Threshold, Rising | | 105 | 110 | 115 | % |
| | Hysteresis | | | 2.5 | | % |
| PGUV | Vout1/2/3/4 Power Good Under Voltage Threshold, Falling | | 85 | 90 | 95 | % |
| | Hysteresis | | | 2.5 | | % |
| Protection | | | | | | |
| $V_{OUT,OVP}$ | Vout1/2/3/4 Over Voltage Threshold, Rising | | 115 | 120 | 125 | % |
| | Hysteresis | | | 5 | | % |
| $V_{OUT,UVP}$ | Vout1/2/3/4 Under Voltage Threshold, Falling | | 70 | 75 | 80 | % |
| | Hysteresis | | | 5 | | % |
| $V_{IN,OVP}$ | VIN Over Voltage Threshold, Rising | | 19.5 | 21 | 22.5 | V |
| | Hysteresis | | | 1 | | V |
| | | | | 175 | | °C |
| | | | | 15 | | °C |

All Rights Reserved

## TYPICAL CHARACTERISTICS

$V_{IN}$=10V, $T_A$=-40°C~125°C, unless otherwise noted.

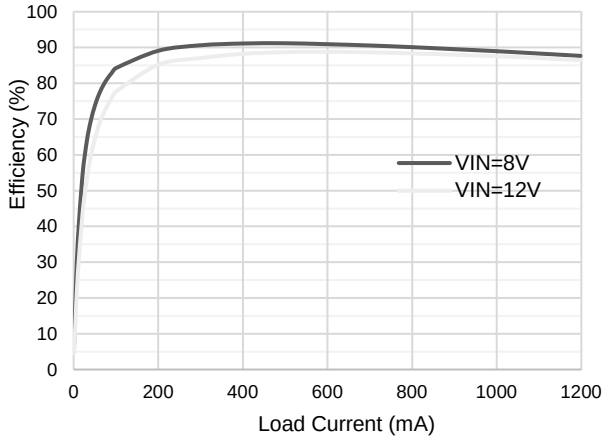


Figure 1. Buck1 Efficiency vs Load Current, $V_{OUT1}$=3.2V

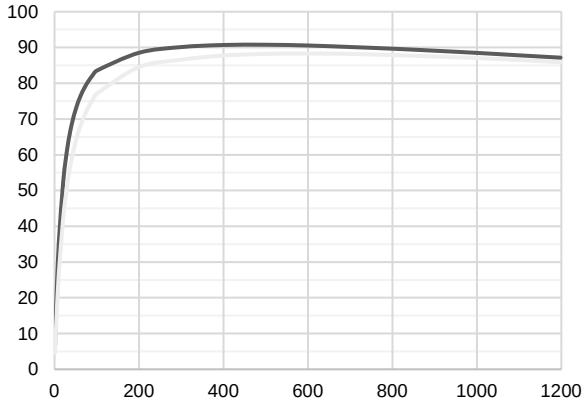


Figure 2. Buck1 Efficiency vs Load Current, $V_{OUT1}$=3.0V

Figure 3. Buck2 Efficiency vs Load Current, $V_{OUT2}$=1.8V

Figure 4. Buck3 Efficiency vs Load Current, $V_{OUT3}$=1.2V

Figure 5. Buck3 Efficiency vs Load Current, $V_{OUT3}$=1.5V

Figure 6. Buck1 Peak Current Limit vs. Temperature

 © 2024 Silicon Content Technology Co., Ltd. All Rights Reserved

## FUNCTIONAL BLOCK DIAGRAM

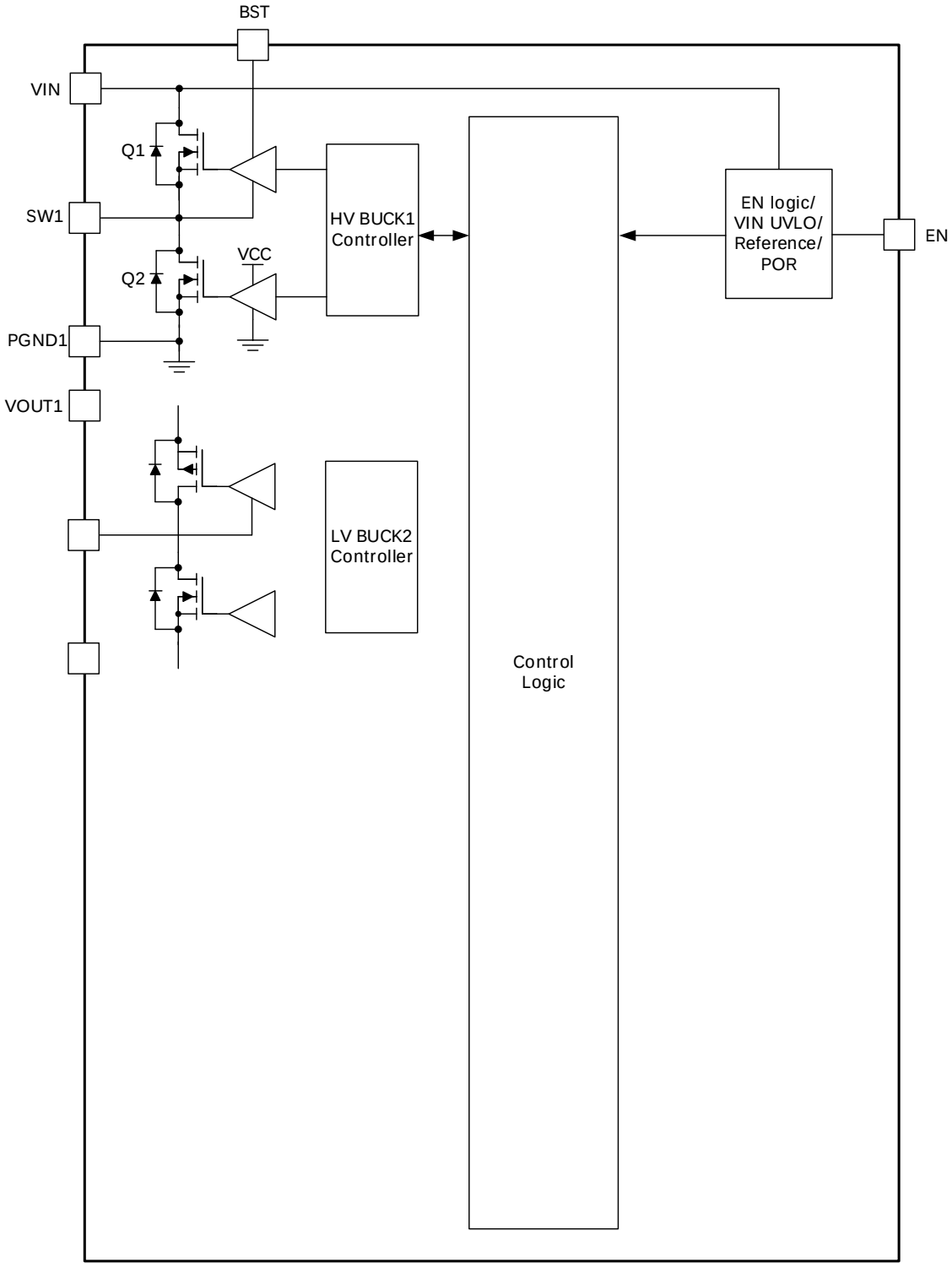


 © 2024 Silicon Content Technology Co., Ltd. All Rights Reserved

# OPERATION

Overview

The SCT61240Q is a highly integrated power management IC (PMIC) optimized for automotive camera system. It integrates three high efficiency synchronous BUCK converters (HVBUCK1, LVBUCK2, LVBUCK3), and a high-PSRR low noise LDO with OV/UV monitoring on all outputs.

VOUT1 is the output of BUCK1, which is powered from VIN (Power Over Coax) and can output 1.2A continuous current with the output voltage set to LDOOUT+300mV/500mV or fixed 3.3V.

VOUT2 is the output of BUCK2, which is powered from VOUT1 and can output 600mA continuous current with the output voltage fixed to 1.8V.

VOUT3 is the output of BUCK3, which is powered from VOUT1 and can output 1.2A continuous current with the output voltage set to 1.1V/1.2V/1.3V/1.5V through RSET PIN for different sensors.

LDOOUT is the output of LDO, which is powered from VOUT1 (need to connect LDOIN to VOUT1) and can output 300mA continuous current with the output voltage set to 2.7V/2.8V/2.9V/3.3V through RSET PIN for different sensors.

With a compact QFN2.5x3.5 package, the SCT61240Q greatly reduces external components count and PCB space.

VIN and EN UVLO

 © 2024 Silicon Content Technology Co., Ltd. All Rights Reserved 

Under Voltage Protection

If an output falls below the under voltage protection threshold, all outputs will shut off for the hiccup time. When hiccup ends, the normal power up sequence will start again according to the SEQ and RSET setting. When entry hiccup, the output discharge will operate during the hiccup time.

Over Current Protection (OCP)

For the three bucks and LDO, the SCT61240Q provides both peak and valley current limit designed to limit the peak/valley inductor current to ensure that the switching currents remain within the device capabilities during overload conditions or during an output short circuit.

When the HS-FET turns on, the chip monitors the increased IL through the relevant operating main power switch. Once the peak IL exceeds the peak current limit threshold, the HS-FET turns off immediately, and the LS-FET turns on to conduct and decrease IL. The HS-FET does not turn on again until IL falls below the valley current limit threshold.

Power Good

The PG pin is a push-pull output. It goes to logic high when the device is powered on, and all outputs are within the power good range, and no faults reported. The high output level can be programmed to either 3.3V or 1.8V.

PG will assert low when any of below events occur:

- Buck1's output is out of power good range or VOUT OV/UV range
- Buck2's output is out of power good range or VOUT OV/UV range
- Buck3's output is out of power good range or VOUT OV/UV range
- LDO's output is out of power good range or VOUT OV/UV range
- Junction temperature is over Thermal Shutdown point
- VIN is higher than VIN OVP threshold

Hiccup or L atch off P rotection

When below faults are detected, the SCT61240Q will enter hiccup or latch off mode (programmable option). When select hiccup mode and entry hiccup, all the channels shut off for 3.6ms, and then the normal power up sequence will start again according to the SEQ and RSET setting. When select latch off mode and entry latch off, all the channels shut off and not restart unless VIN/EN power on reset (POR).

The faults that make the device entry hiccup/latch off protection:

- Buck1's output is out of VOUT OV/UV range
- Buck2's output is out of VOUT OV/UV range
- Buck3's output is out of VOUT OV/UV range
- LDO's output is out of VOUT OV/UV range
- Junction temperature is over Thermal Shutdown point
- VIN is higher than VIN OVP threshold

Output Discharge

In order to discharge the energy of output capacitor during power off sequence, all channels have active discharge path from their output to ground. The discharge path is turn-on when channel is disabled.

Internal Soft- Start

The soft start function is implemented to prevent the PMIC output voltage from overshooting during start-up. When

 © 2024 Silicon Content Technology Co., Ltd. All Rights Reserved

# APPLICATION INFORMATION

## Typical Application

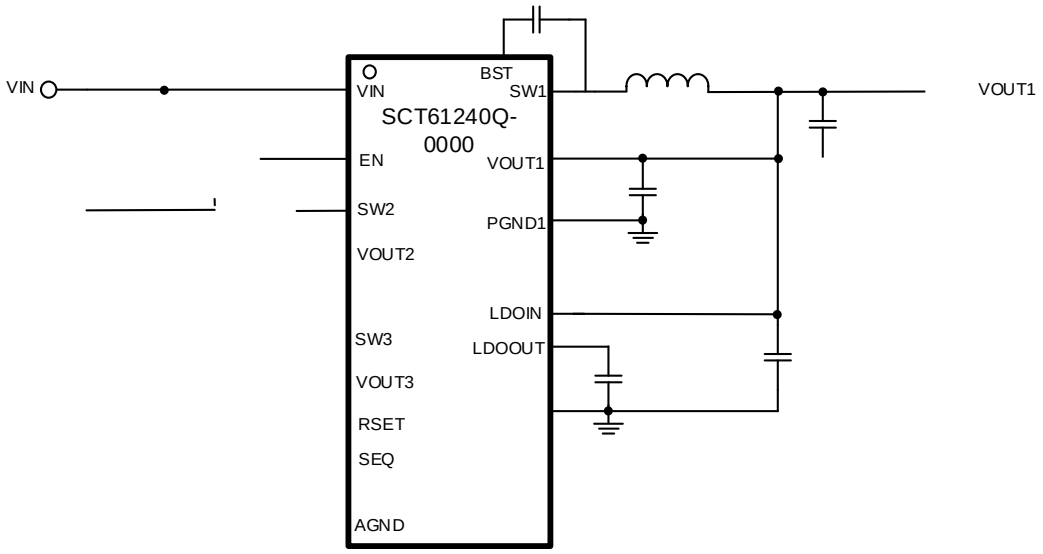


 © 2024 Silicon Content Technology Co., Ltd. All Rights Reserved 

Under Voltage Lock-Out

An external voltage divider network of $R_1$ from the input to EN pin and $R_2$ from EN pin to the ground can set a higher input voltage's Under Voltage Lock-Out (UVLO) threshold. The UVLO has two thresholds, one for power up when the input voltage is rising and the other for power down or brown outs when the input voltage is falling. Use Equation 1 and Equation 2 to calculate the values of $R_1$ and $R_2$ resistors.

$$= 1 + \frac{1}{2} \quad (1)$$

$$= 1 + \frac{1}{2} \quad (2)$$

where

- $V_{rise}$ is rising threshold of Vin UVLO
- $V_{fall}$ is falling threshold of Vin UVLO
- $V_{ENrise}$ is rising threshold of EN UVLO
- $V_{ENfall}$ is falling threshold of EN UVLO

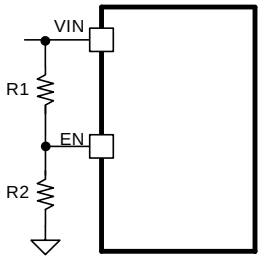


Figure 14. System UVLO by enable divide

 © 2024 Silicon Content Technology Co., Ltd. All Rights Reserved

- $V_{IN(max)}$ is the maximum input voltage
- $I_{OUT(max)}$ is the maximum DC load current
- LIR is coefficient of $I_{LPP}$ to $I_{OUT}$

The total current flowing through the inductor is the inductor ripple current plus the output current. When selecting an inductor, choose its rated current especially the saturation current larger than its peak operation current and RMS current also not be exceeded. Therefore, the peak switching current of inductor, $I_{LPEAK}$ and $I_{LRMS}$ can be calculated as in equation 5 and equation 6.

$$= \quad + \frac{}{2}$$

 © 2024 Silicon Content Technology Co., Ltd. All Rights Reserved 

-4

Application Waveforms

Vin=10V, RSET=SEQ=8kΩ $V_{OUT1}$=3.0V, $V_{OUT2}$=1.8V, $V_{OUT3}$=1.2V, $V_{OUT4}$=2.7V,unless otherwise noted-4V , -

 © 2024 Silicon Content Technology Co., Ltd. All Rights Reserved 

Application Waveforms (continued)

Vin=10V, RSET=SEQ=8kΩ $V_{OUT1}$=3.0V, $V_{OUT2}$=1.8V, $V_{OUT3}$=1.2V, $V_{OUT4}$=2.7V,unless otherwise noted

Figure 21. Buck2 Over Current Protection
(0.6A to hard short)

Figure 22. Buck2 Over Current Release
(hard short to 0.6A)

Figure 23. Buck3 Over Current Protection
(1.2A to hard short)

Figure 24. Buck3 Over Current Release
(hard short to 1.2A)

Figure 25. LDO Over Current Protection
(0.3A to hard short)

Figure 26. LDO Over Current Release
(hard short to 0.3A)

 © 2024 Silicon Content Technology Co., Ltd. All Rights Reserved

Application Waveforms (continued)

Vin=10V, RSET=SEQ=8kΩ $V_{OUT1}$=3.0V, $V_{OUT2}$=1.8V, $V_{OUT3}$=1.2V, $V_{OUT4}$=2.7V,unless otherwise noted

Figure 27. Buck1 Steady State (Io1 = 1.2A)

Figure 28. B (tT28 4.24 0 Td = 1.0 (Iot = 1.0 .002 D6475 /P <</7D6413 k)]TJ

 © 2024 Silicon Content Technology Co., Ltd. All Rights Reserved 

# PACKAGE INFORMATION

 © 2024 Silicon Content Technology Co., Ltd. All Rights Reserved 

## TAPE AND REEL INFORMATION

 © 2024 Silicon Content Technology Co., Ltd. All Rights Reserved

| Symbol | Dimensions in Millimeters |
|---|---|
| A0 | 2.75±0.10 |
| B0 | 3.75±0.10 |
| D | $1.5^{+0.10}$ |
| D1 | 1.00±0.10 |
| E | 1.75±0.10 |
| F | 5.50±0.05 |
| K0 | 1.00±0.10 |
| P | 4.00±0.10 |
| P0 | 4.00±0.10 |
| P2 | 2.00±0.05 |
| t | 0.25±0.03 |
| W | $12.00^{+0.30}_{-0.10}$ |
| | 5 ° max |

 © 2024 Silicon Content Technology Co., Ltd. All Rights Reserved 